Solenoid directional valves type DPHI, DPHE, DPHER new series

two stage, ISO 4401 size 10, 16, 25 and 32

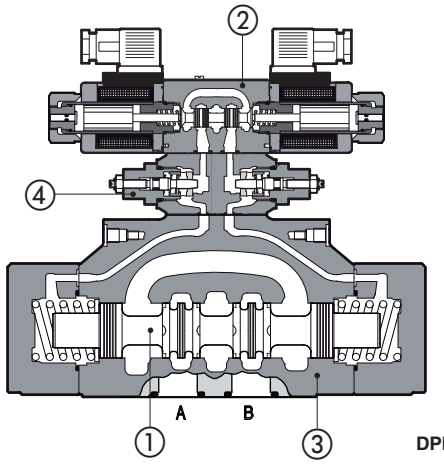

DPHE-47**/H

DPHI, DPHE and DPHER are spool ① type, two or three position, two stage directional solenoid valves.
They are operated by a direct solenoid valve ② available in three different executions:

- DHI suitable for AC and DC supply with **cURus** certified solenoids;
- DHE suitable for AC and DC supply, high performances.
- DHER as DHE but with **cURus** certified solenoids

Shell-moulding castings ③ machined by transfer lines and then cleaned by thermal deburring. Optimized flow paths largely cored with extrawide channels to tank for low pressure drops.
Valves can be supplied with optional devices for control of switching times ④, see section 4 for available options. Coils are easily re-placeable without aid of tools.
Rugged execution suitable for outdoor use.
Surface mounting: ISO 4401, size 10, 16, 25 and 32
Max flow up to 160, 300, 700, 1000 l/min.
Pressure up to 350 bar

1 MODEL CODE

DPH I - 2 71 1 /A – X 24DC ** /*

- DPH: Two stage directional control valve
- I: Solenoid pilot valve:
  - **I** = DHI for AC and DC supply with **cURus** certified solenoids
  - **E** = DHE for AC and DC supply, high performances
  - **ER** = DHER, as DHE but with **cURus** certified solenoids
- 2: Valve size:
  - **1** = 10 **2** = 16 **4** = 25 **6** = 32
- 71: Valve configuration, see section 2:
  - **61** = single solenoid, center plus external position, spring centered
  - **63** = single solenoid, 2 external positions, spring offset
  - **67** = single solenoid, center plus external position, spring offset
  - **70** = double solenoid, 2 external positions, without springs
  - **71** = double solenoid, 3 positions, spring centered
  - **75** = double solenoid, 2 external positions, with detent
  - Other configurations are available on request
- 1: Spool type, see section 2
- /A: Options, see section 4
- X:
  - **X** = without connector
  - See section 5 for available connectors, to be ordered separately
  - **00** = solenoid valve without coils (for DPHI)
  - **00-AC** = AC solenoid valve without coils (for DPHE, DPHER)
  - **00-DC** = DC solenoid valve without coils (for DPHE, DPHER)
- 24DC: Voltage code, see section 6
- **: Series number
- /*: Syntethic fluids:
  - **WG** = water-glycol
  - **PE** = phosphate ester

2 CONFIGURATIONS and SPOOLS

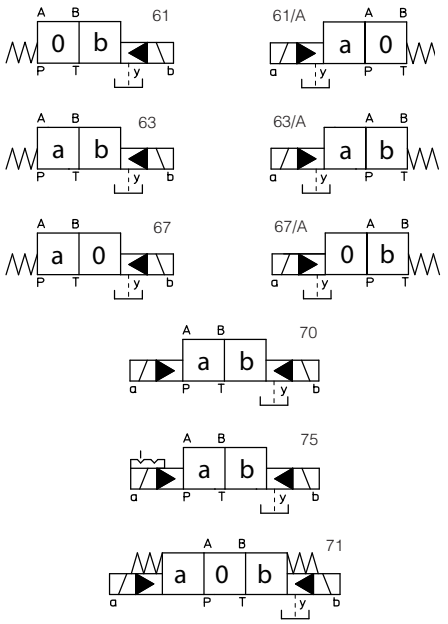

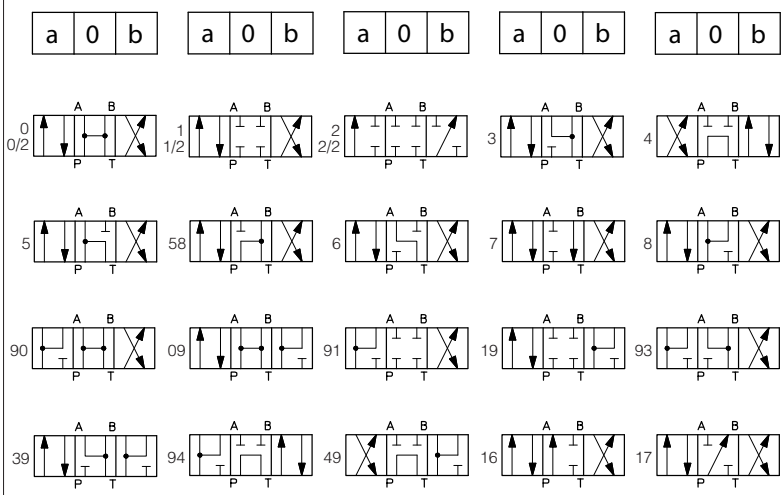

NOTES:
-Spools **0/2, 1/2, 2/2** are available only for configurations **63** and **63/A**
-For **DP*-1** are available only spools: **0, 0/2, 1, 1/2, 3, 4, 5, 58, 6, 7**
-For **DP*-6** following spools are not available: **0/2, 1/2, 16, 17, 39, 49, 09, 90, 93, 94**

3 MAIN CHARACTERISTICS OF SOLENOID DIRECTIONAL VALVES TYPE DPHI, DPHE and DPHER

Installation position	Any position for all valves except for type -*70 (without springs) that must be installed with horizontal axis if operated by impulses.
Subplate surface finishing	Roughness index $\sqrt{0.4}$ flatness ratio 0,01/100 (ISO 1101)
Ambient temperature	from -20°C to +70°C
Fluid	Hydraulic oil as per DIN 51524 .... 535; for other fluids see section 1
Recommended viscosity	15 ÷ 100 mm²/s at 40°C (ISO VG 15 ÷ 100)
Fluid contamination class	ISO 19/16, achieved with in line filters at 25 μm value to $\beta_{25} \geq 75$ (recommended)
Fluid temperature	-20°C +60°C (standard and /WG seals) -20°C +80°C (/PE seals)
Flow direction	As shown in the symbols of tables 2
Operating pressure	P, A, B, X = **350 bar** T = **250 bar** for external drain (standard) T and Y with internal drain (option /D) = **120 bar** DPHI; **210 bar** DPHE(R) (DC); **160 bar** DPHE(R) (AC) Ports Y and L (if required): 0 bar Minimum pilot pressure for correct operation is 8 bar
Rated flow	See diagrams Q/Δp at section 7
Maximum flow	DPH*-1: **160 l/min;** DPH*-2: **300 l/min;** DPH*-4: **700 l/min;**DPH*-6: **1000 l/min** (see rated flow at section 7 and operating limits at section 8)

3.1 Coils characteristics

Insulation class	H (180°C) Due to the occuring surface temperatures of the solenoid coils, the European standards EN563 and EN ISO 4413 must be taken into account
Connector protection degree	IP 65
Relative duty factor	100%
Supply voltage and frequency	See electric feature 6
Supply voltage tolerance	± 10%
Certification (only DPHI and DPHER)	**cURus** North American standard

4 NOTES

4.1 Options

/A = Solenoid mounted at side of port A of main body (only for single solenoid valves). In standard version, solenoid is mounted at side of port B.
/D = Internal drain.
/E = External pilot pressure.
/FC = With mechanical microswitch for spool position monitoring (not for DPH*-1), see tab. E110.
/F* = With proximity switch for spool position monitoring: see tab. E110.
/H = Adjustable chokes (meter-out to the pilot chambers of the main valve).
/H9 = Adjustable chokes (meter-in to the pilot chambers of the main valve).
/R = Pilot pressure generator (4 bar on port P - not for DPH*-1, see section 10.
/S = Main spool stroke adjustment (not for DPH*-1).
/WP = Prolonged manual override protected by rubber cap.
/L1, /L2, /L3 = Device for main spool switching time control (dimension of calibrated restrictors on A and B ports of the pilot valve: **L1** =0,8mm, **L2** =1mm, **L3** =1,25mm)

4.2 Spools

- spools type **0** and **3** are also available as 0/1 and 3/1. With them, when in centre position, oil passage from ports to tank are restricted.
- spools type **1, 4, 5, 58, 6** and **7** are also available as 1/1, 4/8, 5/1, 58/1, 6/1 and 7/1 (1/1, 6/1 and 7/1 only for DPH*-2, -4, -6) that are properly shaped to reduce water-hammer shocks during the switching (to use with option /L*).
- other types of spools can be supplied on request.

5 ELECTRONIC CONNECTORS ACCORDING TO DIN 43650 - the connectors must be ordered separately

Code of connector	Function
SP-666	Connector IP-65, suitable for direct connection to electric supply source
SP-667	As SP-666 connector IP-65 but with built-in signal led, suitable for direct connection to electric supply source
SP-669	With built-in rectifier bridge for supplying DC coils by alternating current (AC 110V and 230V - Imax 1A)

For other available connectors, see tab. E010, E015 and K500

6 ELECTRIC FEATURES

Valve	External supply nominal voltage ± 10%	**Voltage code**	Type of connector	Power consumption (2)	Code of spare coil			
					DPHI	Colour of coil label DPHI	DPHE	DPHER
DPHI DPHE DPHER	6 DC	**6 DC** (4)	SP-666 or SP-667	33 W (DPHI) 30 W (DPHE, DPHER)	SP-COU-6DC/ 80	brown	-	-
	12 DC	**12 DC**			SP-COU-12DC /80	green	SP-COE-12DC /10	SP-COER-12DC /10
	14 DC	**14 DC**			SP-COU-14DC /80	brown	SP-COE-14DC /10	SP-COER-14DC /10
	24 DC	**24 DC**			SP-COU-24DC /80	red	SP-COE-24DC /10	SP-COER-24DC /10
	28 DC	**28 DC**			SP-COU-28DC /80	silver	SP-COE-28DC /10	SP-COER-28DC /10
	48 DC	**48 DC**			SP-COU-48DC /80	silver	SP-COE-48DC /10	SP-COER-48DC /10
	110 DC	**110 DC**			SP-COU-110DC /80	gold	SP-COE-110DC /10	SP-COER-110DC /10
	125 DC	**125 DC**			SP-COU-125DC /80	blue	SP-COE-125DC /10	SP-COER-125DC /10
	220 DC	**220 DC**			SP-COU-220DC /80	black	SP-COE-220DC /10	SP-COER-220DC /10
	24/50 AC 24/60 AC	**24/50/60 AC** (4)		60 VA (DPHI) 58 VA (DPHE, DPHER) (3)	SP-COI-24/50/60AC /80 (1)	pink	-	-
	48/50 AC 48/60 AC	**48/50/60 AC** (4)			SP-COI-48/50/60AC /80 (1)	white	-	-
	110/50 AC 115/60 AC (5) 120/60 AC (4)	**110/50/60 AC** **115/60 AC** **120/60 AC**			SP-COI-110/50/60AC /80 (1) - SP-COI-120/60AC /80	yellow white	SP-COE-110/50/60AC /10 SP-COE-115/60AC /10 -	SP-COER-110/50/60AC /10 SP-COER-115/60AC /10 -
	230/50 AC 230/60 AC	**230/50/60 AC** **230/60 AC**			SP-COI-230/50/60AC /80 (1) SP-COI-230/60AC /80	light blue silver	SP-COE-230/50/60AC /10 SP-COER-230/60AC /10	SP-COER-230/50/60AC /10 SP-COER-230/60AC /10
	110/50 AC 120/60 AC	**110RC**	SP-669	40 VA 35 VA	SP-COU-110RC /80	gold	SP-COE-110RC /10	SP-COER-110RC /10
	230/50 AC 230/60 AC	**230RC**		40 VA 35 VA	SP-COU-230RC /80	blue	SP-COE-230RC /10	SP-COER-230RC /10

(1) Coil can be supplied also with 60 Hz of voltage frequency: in this case the performances are reduced by 10÷15% and the power consumption is 55 VA (DPHI) and 58 VA (DPHE*)
(2) Average values based on tests preformed at nominal hydraulic condition and ambient/coil temperature of 20°C.
(3) When solenoid is energized, the inrush current is approx 3 times the holding current. Inrush current values correspond to a power consumption of about 150 VA.
(4) Only for DPHI
(5) Only for DPHE and DPHER

7 FLOW VERSUS PRESSURE DIAGRAMS

Based on mineral oil ISO VG 46 at 50°C

Spool type \ Flow direction	P→A	P→B	A→T	B→T	P→T
0/2, 1/2	D	E	D	C	-
0	D	E	C	C	E
1	A	B	D	C	-
3, 6, 7	A	B	C	C	-
4, 4/8	B	C	D	D	-
5, 58	A	E	C	C	F

DPH*-1

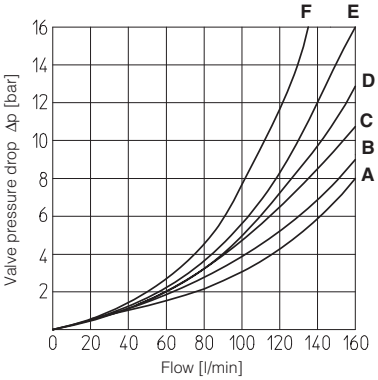

8 OPERATING LIMITS

The max recommended flow rates - l/min - for a correct operation are shown in the tables below for some typical spools and inlet pressure.
For higher values the use of the hydraulic centering device is recommended.

Spool	Inlet pressure			
	70	160	210	350
0, 1, 3, 6, 7	160	160	160	145
4, 4/8	160	160	135	100
5, 58	160	160	145	110
0/1, 0/2	160	160	145	135

Spool type \ Flow direction	P→A	P→B	A→T	B→T	P→T
4, 4/8	2	2	2	2	1
Other	2	2	2	2	-

DPH*-2

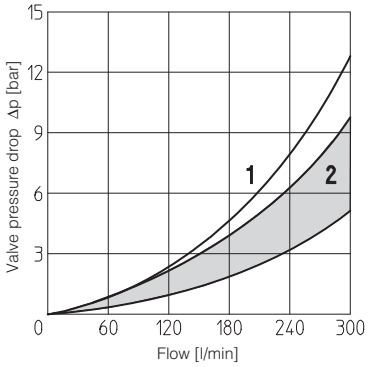

Spool	Inlet pressure			
	70	140	210	350
0, 1, 3, 6, 7, 8	300	300	300	250
2, 4, 4/8	300	300	240	140
5	260	220	180	100
0/1	300	250	210	180
9, 9	300	300	270	200

Spool type \ Flow direction	P→A	P→B	A→T	B→T	P→T
4, 4/8	2	2	2	2	1
Other	2	2	2	2	-

DPH*-4

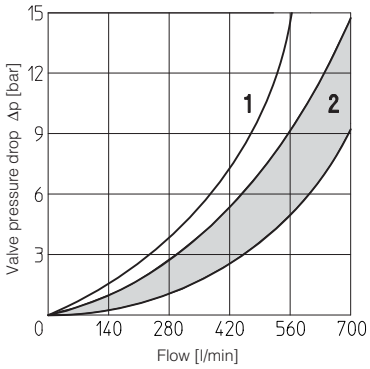

Spool	Inlet pressure			
	70	140	210	350
1, 6, 7, 8	700	700	700	600
2, 4, 4/8	500	500	450	400
5, 0/1	600	520	400	300
0, 3	700	700	600	540
9, 9	500	500	500	450

Spool type \ Flow direction	P→A	P→B	A→T	B→T	P→T
4, 4/8	2	2	2	2	1
Other	2	2	2	2	-

DPH*6

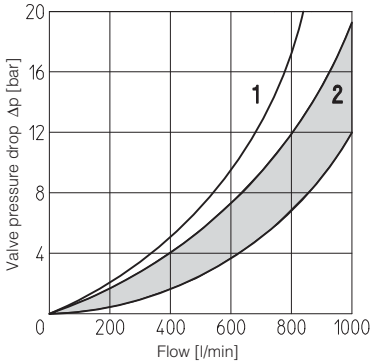

Spool	Inlet pressure			
	70	140	210	350
1, 6, 7, 8	1000	950	850	700
0	950	900	800	650
4, 4/8, 5	850	800	700	450
0/1	950	850	650	450

9 SWITCHING TIMES (average values in m sec)

DPH*-1

Configuration		Piloting pressure 70 bar Alternating current	70 bar Direct current	140 bar Alternating current	140 bar Direct current	210 bar Alternating current	210 bar Direct current	250 bar Alternating current	250 bar Direct current
71, 61, 67, 61*/A, 67*/A	Switch ON	35	50	30	45	25	40	20	35
	Switch OFF	50							
63, 63*/A	Switch ON	50	75	40	65	35	55	30	50
	Switch OFF	80							

DPH*-2

Configuration		Piloting pressure 70 bar Alternating current	70 bar Direct current	140 bar Alternating current	140 bar Direct current	210 bar Alternating current	210 bar Direct current	250 bar Alternating current	250 bar Direct current
71, 61, 67, 61*/A, 67*/A	Switch ON	40	55	30	50	25	45	20	40
	Switch OFF	60							
63, 63*/A	Switch ON	55	80	45	70	40	60	35	55
	Switch OFF	95							

DPH*-4

Configuration		Piloting pressure 70 bar Alternating current	70 bar Direct current	140 bar Alternating current	140 bar Direct current	210 bar Alternating current	210 bar Direct current	250 bar Alternating current	250 bar Direct current
71, 61, 67, 61*/A, 67*/A	Switch ON	60	80	45	60	35	50	30	45
	Switch OFF	80							
63, 63*/A	Switch ON	95	115	75	95	65	75	50	65
	Switch OFF	130							

DPH*-6

Configuration		Piloting pressure 70 bar Alternating current	70 bar Direct current	140 bar Alternating current	140 bar Direct current	210 bar Alternating current	210 bar Direct current	250 bar Alternating current	250 bar Direct current
71, 61, 67, 61*/A, 67*/A	Switch ON	70	95	55	70	45	60	40	55
	Switch OFF	150							
63, 63*/A	Switch ON	115	145	95	110	80	100	70	90
	Switch OFF	280							

Notes:

1) For configuration 70 and 75, times of switching ON and switching OFF are the same: this value is equal to time of switch ON of configuration 63.
2) TEST CONDITIONS
   - Nominal voltage supply DC (direct) and AC (alternating) with connector type SP-666. The use of other connectors can affect the switching time;
   - 2 bar of counter pressure on port T;
   - mineral oil: ISO VG 46 at 50°C
3) The response time is affected by elasticity of the hydraulic circuit, by variation of hydraulic characteristics and temperature.

10 PILOT PRESSURE GENERATOR (OPTION /R)

The device **/R** generates an additional pressure drop, in order to ensure the minimum pilot pressure, for correct operation of the valves with internal pilot and fitted with spools type **0, 0/1, 4, 4/8, 5, 58, 09, 90, 94, 49.** The device **/R** has to be fitted when the pressure drop in the valve, verified on flow versus pressure diagrams, is lower than the minimum pilot pressure value.

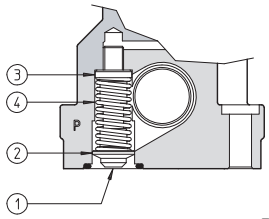

① Flapper-guide
② Flapper
③ Spring stop-washer

④ Spring
for DPH*-2: MO-447
for DPH*-3: MO-472
for DPH*-6: MO-448

DPH*-2

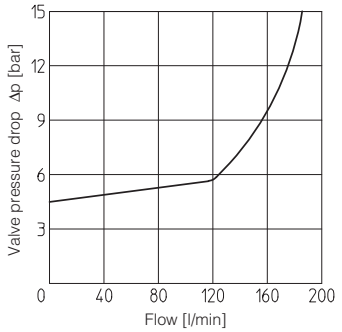

DPH*-4

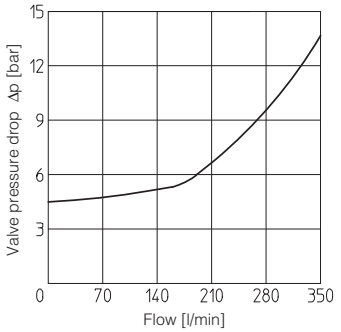

DPH*-6

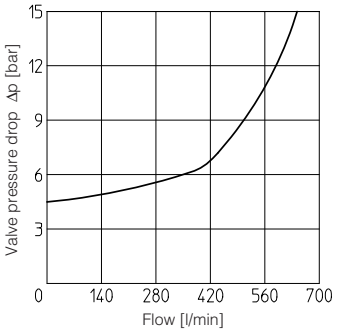

11 ORIFICE LOCATION FOR PILOT/DRAIN CHANNELS

Depending on the position of internal plugs, different pilot/drain configurations can be obtained as shown below.
To modify the pilot/drain configuration proper plugs must only be interchanged. The plugs have to be sealed using loctite 242.
Standard valves have internal pilot and external drain

DPH*-1

Pilot channels

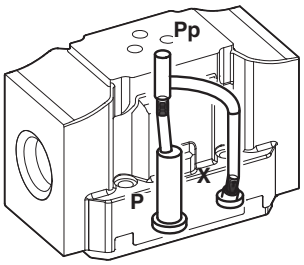

Drain channels

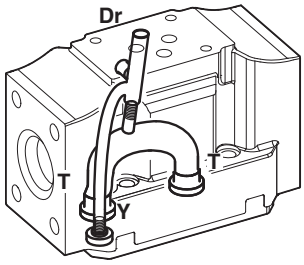

Internal piloting: blinded plug SP-X300F in X; plug SP-X310F in Pp;
External piloting: blinded plug SP-X300F in Pp; plug SP-X310F in X;
Internal drain: blinded plug SP-X300F in Y;
External drain: blinded plug SP-X300F in Dr.

DPH*-2

Pilot channels

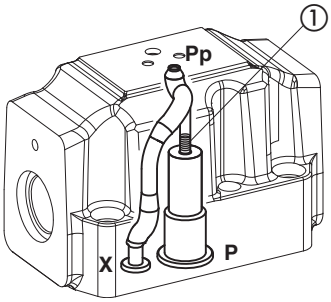

Drain channels

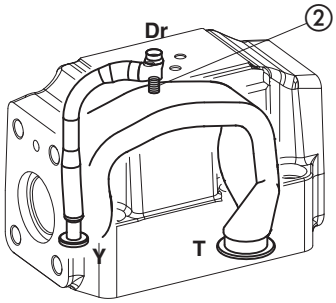

Internal piloting: Without blinded plug SP-X300F ①;
External piloting: Add blinded plug SP-X300F ①;
Internal drain: Without blinded plug SP-X300F ②;
External drain: Add blinded plug SP-X300F ②.

DPH*-4

Pilot channels

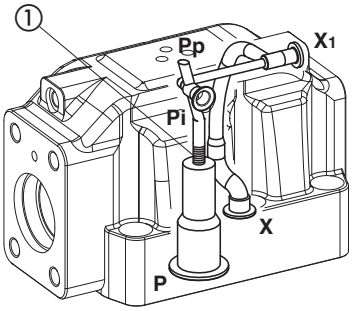

Drain channels

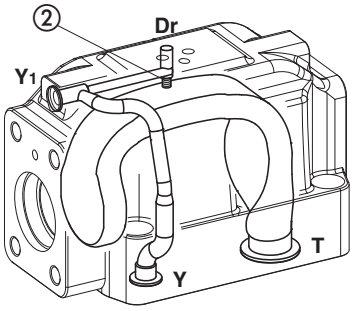

Internal piloting: Without blinded plug SP-X500F ①;
External piloting: Add blinded plug SP-X500F ①;
Internal drain: Without blinded plug SP-X300F ②;
External drain: Add blinded plug SP-X300F ②.

DPH*-6

Pilot channels

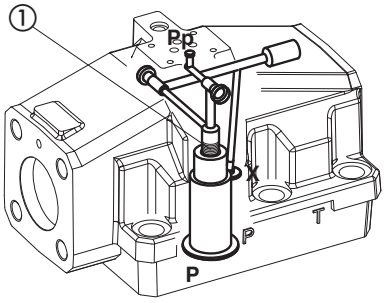

Drain channels

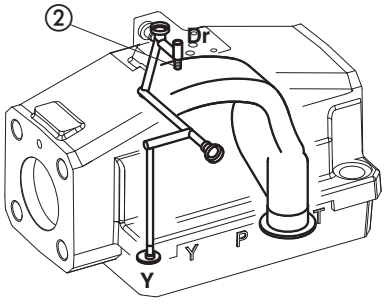

Internal piloting: Without plug ①;
External piloting: Add DIN-908 M16x1,5 in pos ①;
Internal drain: Without plug SP-X300F ②;
External drain: Add SP-X300F ②.

12 DIMENSIONS FOR DPH*-1 AND DPH*-2 [mm]

DPH*-1*
ISO 4401: 2005
Mounting surface: 4401-05-05-0-05
Fastening bolts:
4 socket head screws M6x40 class 12.9
Tightening torque = 15 Nm
Diameter of ports A,B, P, T: Ø = 11 mm;
Diameter of ports X, Y: Ø = 5 mm;
Seals: 5 OR 2050, 2 OR 108

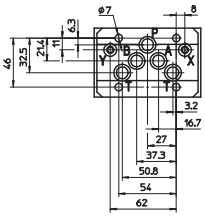

P = PRESSURE PORT
A, B = USE PORT
T = TANK PORT
X = EXTERNAL OIL PILOT PORT
Y = DRAIN PORT

DPHI-1*/H /H9

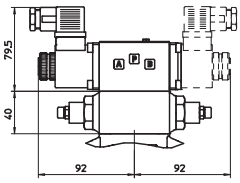

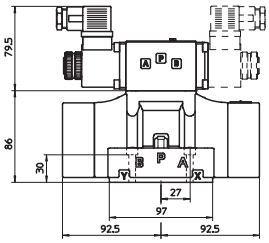

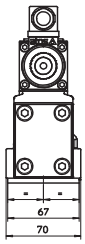

DPHI-1*

Mass of basic versions:
kg 6,5 (one solenoid)
kg 6,8 (two solenoids)

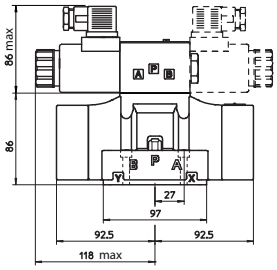

DPHE(R)-1*

Mass of basic versions:
kg 6,9 (one solenoid)
kg 7,6 (two solenoids)

DPH*-2*
ISO 4401: 2005
Mounting surface: 4401-07-07-0-05
Fastening bolts:
4 socket head screws M10x50 class 12.9
Tightening torque = 70 Nm
2 socket head screws M6x45 class 12.9
Tightening torque = 15 Nm
Diameter of ports A, B, P, T: Ø = 20 mm;
Diameter of ports X, Y: Ø = 7 mm;
Seals: 4 OR 130, 2 OR 2043

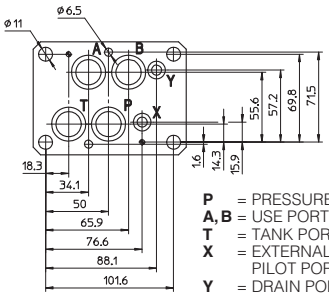

P = PRESSURE PORT
A, B = USE PORT
T = TANK PORT
X = EXTERNAL OIL PILOT PORT
Y = DRAIN PORT

DPHI-2*/H /H9

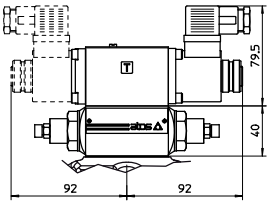

Stroke adjustment device for option/S

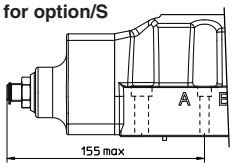

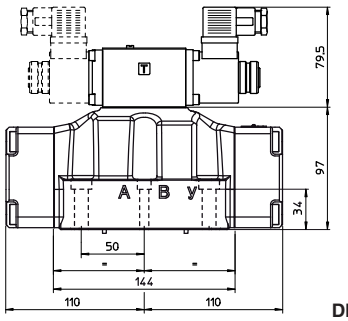

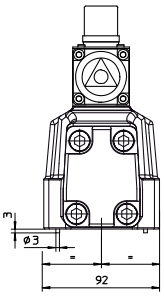

DPHI-2*

Mass of basic versions:
kg 9 (one solenoid)
kg 9,3 (two solenoids)

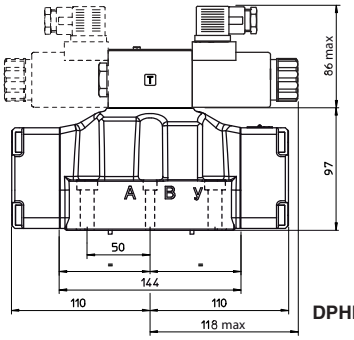

DPHE(R)-2*

Mass of basic versions:
kg 9,4 (one solenoid)
kg 10,1 (two solenoids)

Overall dimensions refer to valves with connectors type SP-666

13 MOUNTING SUBPLATES FOR DPH*-1 AND DPH*-2

Valve	Subplate model	Ports location	Ports		Ø Counterbore [mm]		Mass [Kg]
			A, B, P, T	X, Y	A, B, P, T	X, Y	
DPH*-1	BA-428	Ports A, B, P, T, X, Y underneath;	G 3/4"	G 1/4"	36,5	21,5	5,6
DPH*-1	BA-434	Ports P, T, X, Y underneath; ports A, B on lateral side	G 3/4"	G 1/4"	36,5	21,5	5,5
DPH*-2	BA-418	Ports A, B, P, T, X, Y underneath;	G 3/4"	G 1/4"	36,5	21,5	3,5
DPH*-2	BA-518	Ports A, B, P, T, X, Y underneath;	G 1"	G 1/4"	46	21,5	8
DPH*-2	BA-519	Ports P, T, X, Y underneath; ports A, B on lateral side	G 1"	G 1/4"	46	21,5	8

The subplates are supplied with fastening bolts. For further details see table K280

14 DIMENSIONS FOR DPH*-4 [mm]

DPH*-4*
ISO 4401: 2005
Mounting surface: 4401-08-08-0-05
Fastening bolts:
6 socket head screws M12x60 class 12.9
Tightening torque = 125 Nm
Diameter of ports A, B, P, T: Ø = 24 mm;
Diameter of ports X, Y: Ø = 7 mm;
Seals: 4 OR 4112, 2 OR 3056

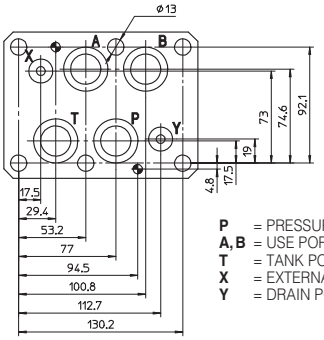

P = PRESSURE PORT
A, B = USE PORT
T = TANK PORT
X = EXTERNAL OIL PILOT PORT
Y = DRAIN PORT

Stroke adjustment device for option/S

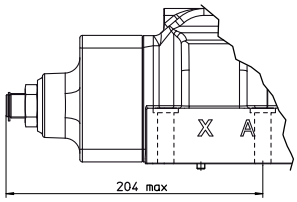

DPHI-4*/H /H9

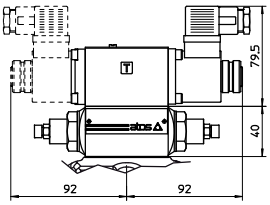

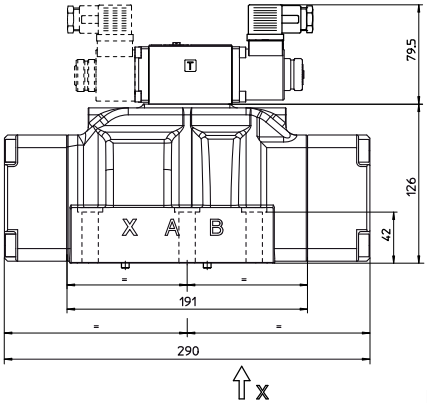

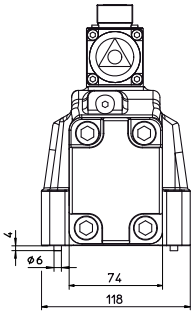

DPHI-4*

Mass of basic versions:
kg 14 (one solenoid)
kg 14,3 (two solenoids)

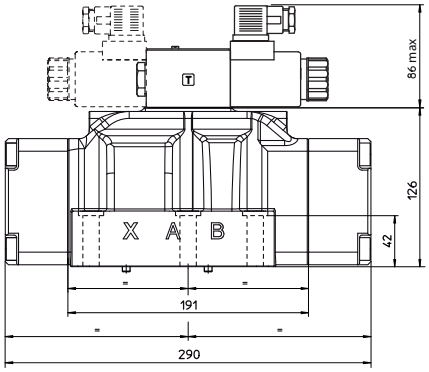

DPHE(R)-4*

Mass of basic versions:
kg 14,4 (one solenoid)
kg 15,1 (two solenoids)

Overall dimensions refer to valves with connectors type SP-666

15 MOUNTING SUBPLATES FOR DPH*-4

Valve	Subplate model	Ports location	Ports		Ø Counterbore [mm]		Mass [Kg]
			A, B, P, T	X, Y	A, B, P, T	X, Y	
DPH*-4	BA-508	Ports A, B, P, T, X, Y underneath;	G 1"	G 1/4"	46	21,5	7
DPH*-4	BA-509	Ports P, T, X, Y underneath; ports A, B on lateral	G 1"	G 1/4"	46	21,5	12,5

The subplates are supplied with fastening bolts. For further details see table K280

16 DIMENSIONS FOR DPH*-6 [mm]

DPH*-6*
ISO 4401: 2005
Mounting surface: 4401-10-09-0-05

Fastening bolts:
6 socket head screws M20x80 class 12.9
Tightening torque = 600 Nm
Diameter of ports A, B, P, T: Ø = 34 mm;
Diameter of ports X, Y: Ø = 7 mm;
Seals: 4 OR 144, 2 OR 3056

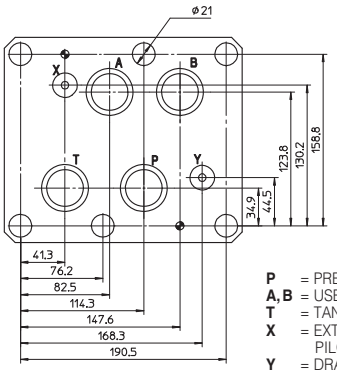

P = PRESSURE PORT
A, B = USE PORT
T = TANK PORT
X = EXTERNAL OIL PILOT PORT
Y = DRAIN PORT

Stroke adjustment device for option/S

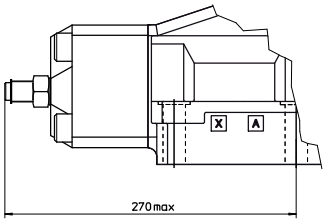

DPHI-6*/H /H9

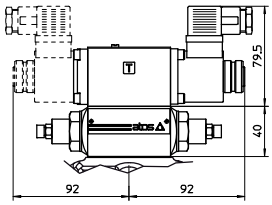

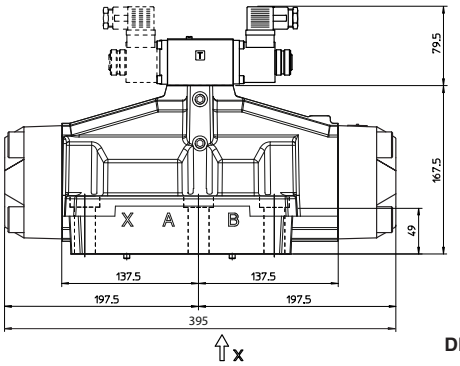

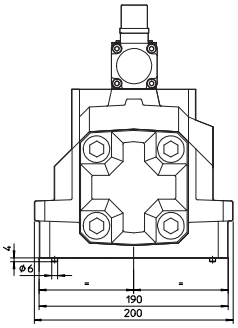

DPHI-6*

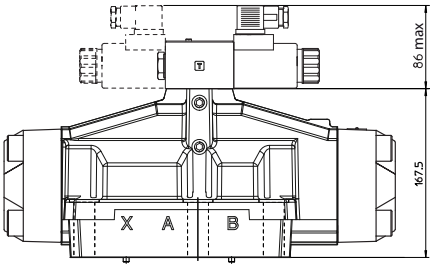

DPHE(R)-6*

Mass of basic versions:
kg 42 (one solenoid)
kg 42,3 (two solenoids)

Mass of basic versions:
kg 42,4 (one solenoid)
kg 44,1 (two solenoids)

Overall dimensions refer to valves with connectors type SP-666

17 MOUNTING SUBPLATES FOR DPH*-6

Valve	Subplate model	Ports location	Ports		Ø Counterbore [mm]		Mass [Kg]
			A, B, P, T	X, Y	A, B, P, T	X, Y	
DPH*-6	BA-708	Ports A, B, P, T, X, Y underneath;	G 1 1/2"	G 1/4"	63,5	21,5	17

The subplates are supplied with fastening bolts. For further details see table K280